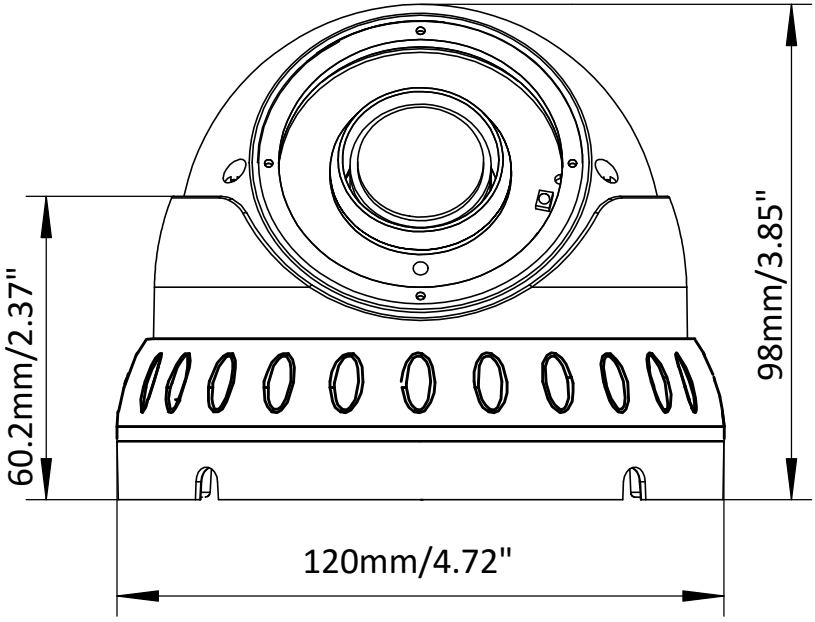

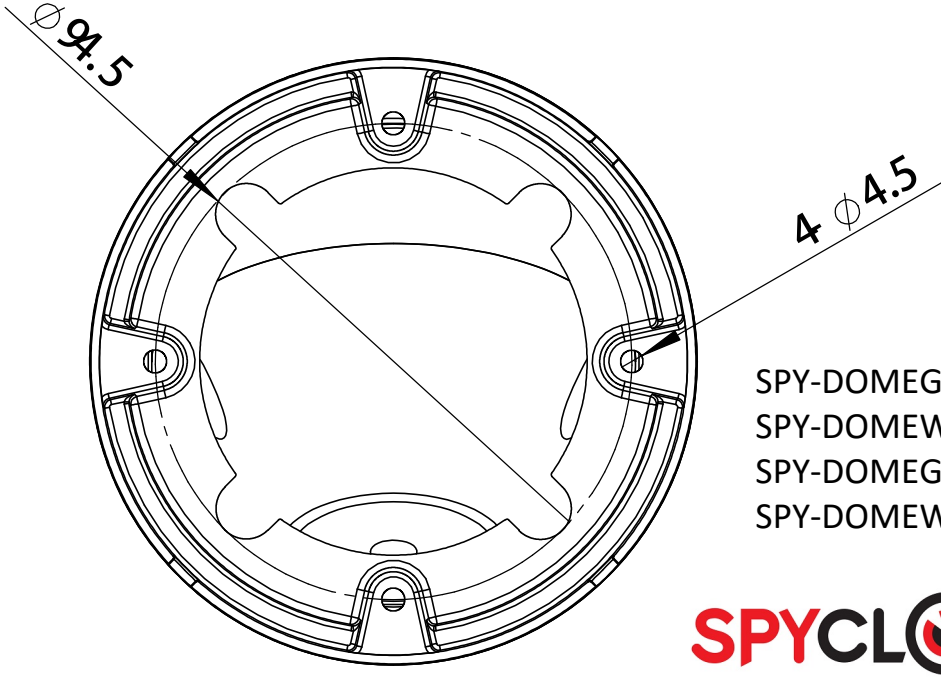

SPY-DOMEGIP4 &
SPY-DOMEWIP4
SPY-DOMEGIP4AF
SPY-DOMEWIP4AF

SPYCLOPS®
SURVEILLANCE SYSTEMS