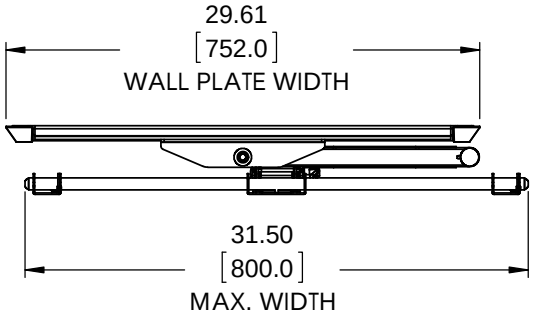

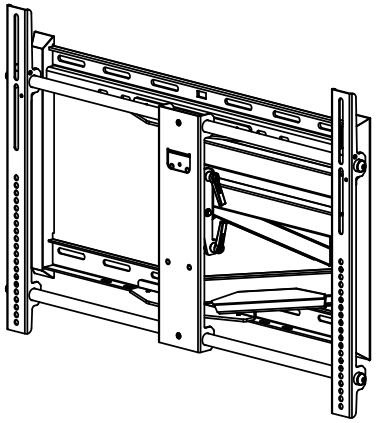

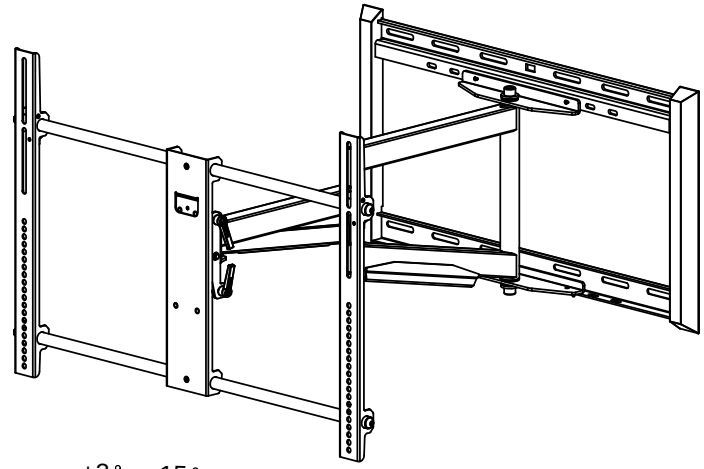

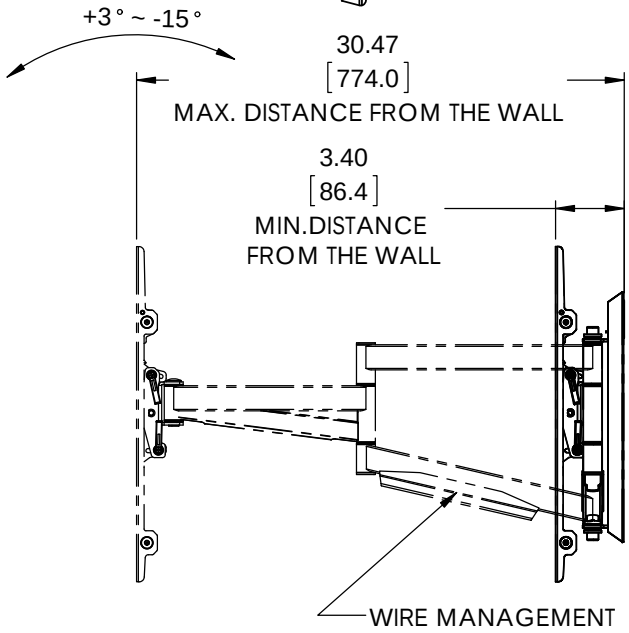

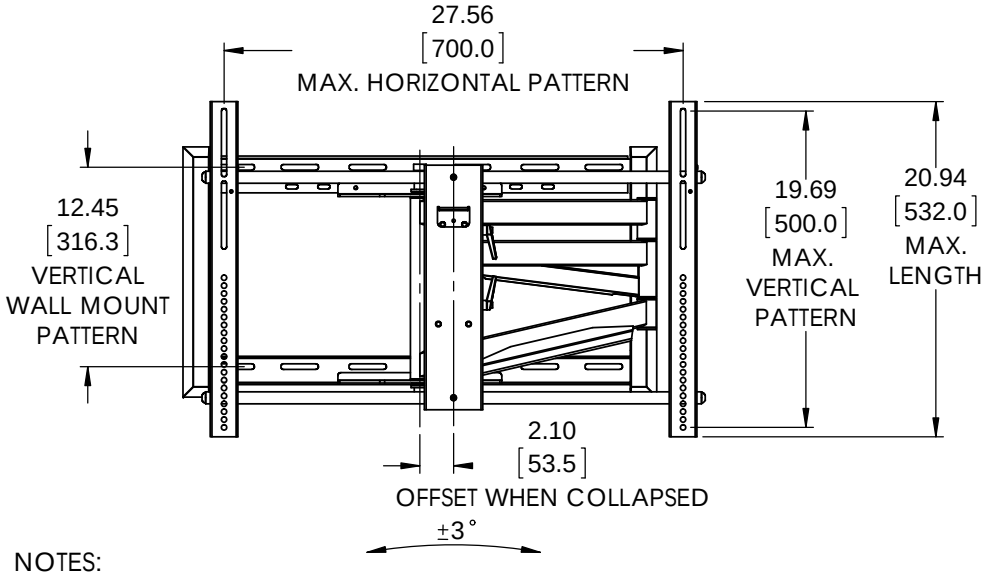

NOTES:

1. MAXIMUM WEIGHT CAPACITY = 150lbs. (68 kg)
2. MAXIMUM VESA MOUNTING CONFIGURATION: 700X500MM
3. ±65° INTERFACE LEFT/RIGHT SWIVEL
4. VIEWING ANGLE INCREMENTS: +3° ~-15°

FMXL75

HELIOS™

866.839.9187 • www.metrahometheater.com

5 4 3 2 1